CAD FILE:

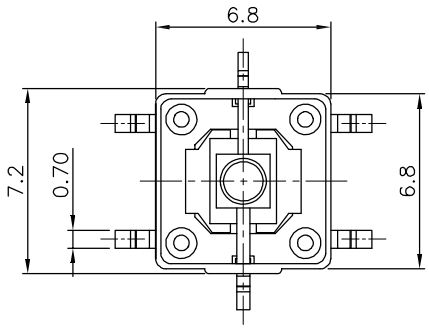

NOTES:

Electrical Characteristics:

Rating：50mA 12VDC

Contact Resistance：50mΩ max. (Initial)

Insulation Resistance：100MΩ min. (at 250 VDC)

Dielectric Strength：AC 250V(50/60Hz) for 1 minute.

LED Operating Current: 20mA max.

Mechanical Characteristics:

Operating Force：160±80gf

Travel：0.25±0.1mm

Static load : 3Kg / 60 sec

Operating Life：100,000 cycles min.

Operating temperature：-20°C to 70°C.

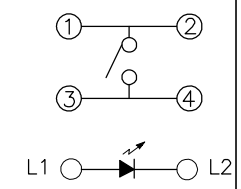

CIRCUIT

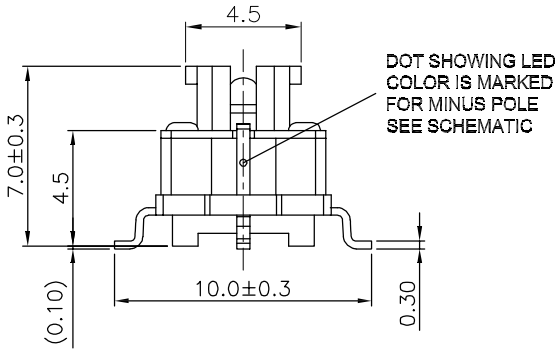

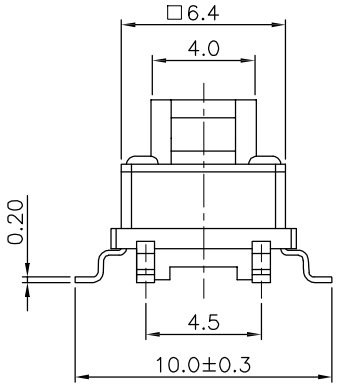

LED COLOR (X)									
1	2	3	4	5	6	23	13	12	52
Red	Yellow	Green	Blue	White	Pure green	Yellow Green	Red Green	Red Yellow	White Yellow

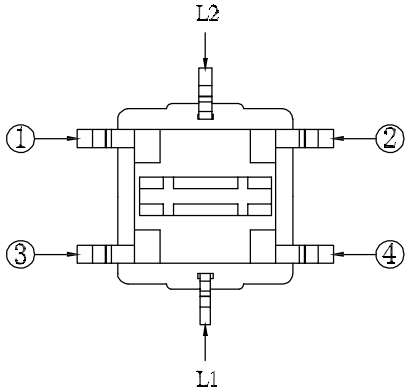

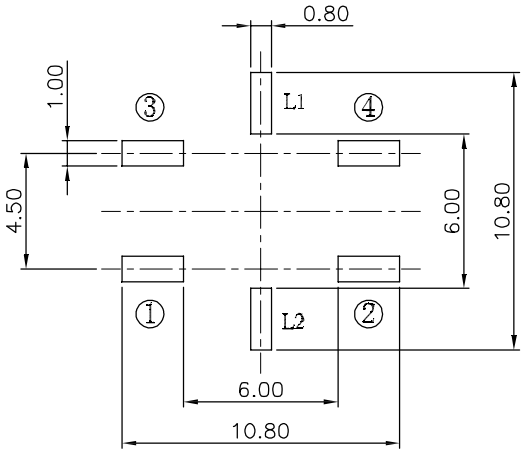

P.C.B LAYOUT

NO.	DESCRIPTION	MATERIAL	QTY	PLATING
8				
7				
6	COVER	PC	1	
5	LED	GaASP/GaP	1	
4	BUTTON	PA66	1	BLACK
3	CONTACT	BRONZE	1	Ag PLATED
2	TERMINAL	BRASS	1	Ag PLATED
1	HOUSING	PA66	1	BLACK

TOLERANCE UNLESS SPECIFIED
WITHIN 1.5: ±0.1mm
OVER 1.5: ±0.2mm
ANGLES: ±2°

ISSUE	DATE	DESCRIPTIONS	APPD.

TITLE: ILLUMINATED TACT SWITCH

UNIT: mm

DRWG. NO.:

MODEL NO: TD02-2S

SCALE: 4:1

DWN: YINCONG

CHK'D: ZHENGZHIHUI

APPD.: LIUSANJUN

DONGGUAN JINBAOLI ELECTRONICS CO.,LTD