Specification of SMD Chips Thermistor

♦ PART NO. : EWTF03-103H3T-N

♦ CHIP DIMENSIONS :

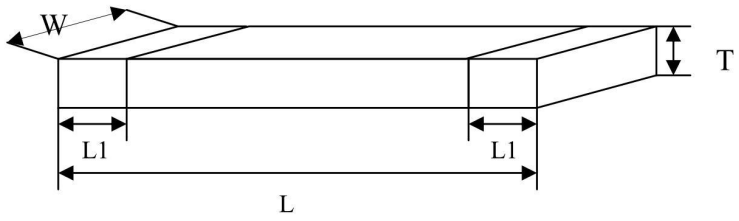

ITEM	L (mm)	W (mm)	T (mm)	L1 (mm)
0603 (1608)	1.60 ± 0.15	0.80 ± 0.15	0.70 ± 0.25	0.20 ~ 0.50

♦ CHIP STRUCTURE

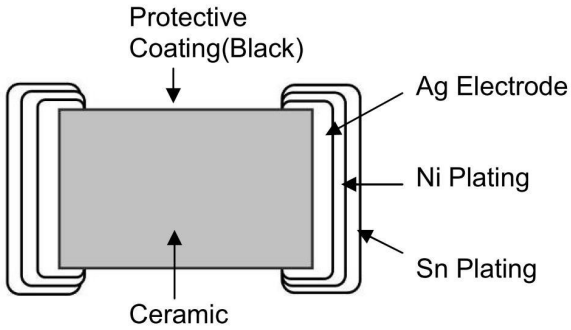

♦ ELECTRICAL CHARACTERISTICS

Style	Symbol	Condition	Specification
Resistance at Ta	R_{25}	Ta = 25 ℃	10 K Ω ± 3 %
B Constant	B	25 ℃ / 85 ℃	3970 K ± 1 %
Thermal Time Constant	T	Ta = 25 ℃	Approx. 5 seconds
Thermal Dissipation Constant	C	Ta = 25 ℃	Approx. 3.5 mW/℃
Maximum Power Rating*	P_{max}	Ta = 25 ℃→125 ℃	350 mW
Operating Temp. Range	--	--	- 40 ℃ ~ 125 ℃

*Maximum Power Rating = Thermal Dissipation Constant × (Max. Operating Temp. (125 ℃) – 25 ℃)

♦ RELIABILITY TEST

Performance	Standard	Test Method	$\triangle R_{25} / R_{25}$
Life	MIL–STD-202F Method 108A	70 ℃, Load Power, 1000 hours.	Max.± 3 %
Humidity	MIL-STD-202F Method 103B	Temperature：40 ℃, Humidity: 95 % RH Load Power, 1000 hours.	Max.± 3 %
Thermal Shock	MIL–STD–202F Method 107	- 40 ℃ to 125 ℃ (30 min) , 10 times.	Max.± 3 %
High Temperature storage	IEC 68-2-2	125 ℃, 1000 hours.	Max. ± 3 %
Solderability	MIL–STD–202F Method 208	Soldering 260 ℃ for 2 seconds.	Min. 95 % coverage
Resistance to Soldering Heat	MIL–R–55342D Para 4.7.7	Soldering 260 ℃ for 10 seconds.	Max.± 3 %
Bending Strength	JIS C 5202 6.1.4	Pressurizing rod at distance 1 mm for 5 seconds. 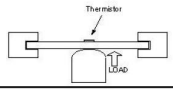	No visible damage
Resistance to flexure of Substrate	JIS C 5202 6.2.1	Pressurizing force shall be over 3 Kg . 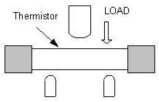	Min.3 Kg
Insulation Resistance	MIL–STD–202F Method 302	DC 250 V For 10 seconds. 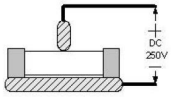	Min.1000 MΩ
Dielectric Withstand Voltage	MIL–STD–202F Method 301		Not Short

♦ RECOMMENDED LAND DIMENSIONS

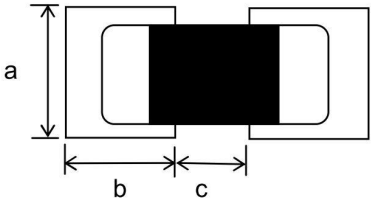

Unit : mm

Type	a	b	c
0402 (1005)	0.6 ~ 0.7	0.8 ~ 0.9	0.4 ~ 0.5
0603 (1608)	0.9 ~ 1.0	1.0 ~ 1.1	0.6 ~ 0.7
0805 (2012)	1.4 ~ 1.5	1.2 ~ 1.3	0.7 ~ 0.8
1206 (3216)	1.7 ~ 1.8	1.5 ~1.6	1.3 ~ 1.4

♦ MOUNTING POSITION

Choose a mounting position that minimizes the stress imposed on the chip during flexing or bending of the board.

Component Direction

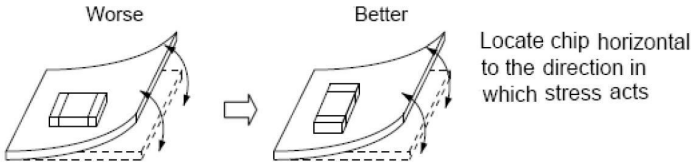

Chip Mounting Close to Board Separation Line

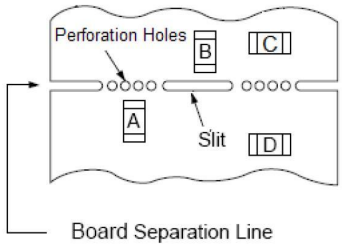

Put this product on the PC Board near the Slit, not near the Perforation Holes.
Keep this product on the PC Board away from the Separation Line.

Worst A-B-C-D Better

♦ REFLOW SOLDERING PROFILE

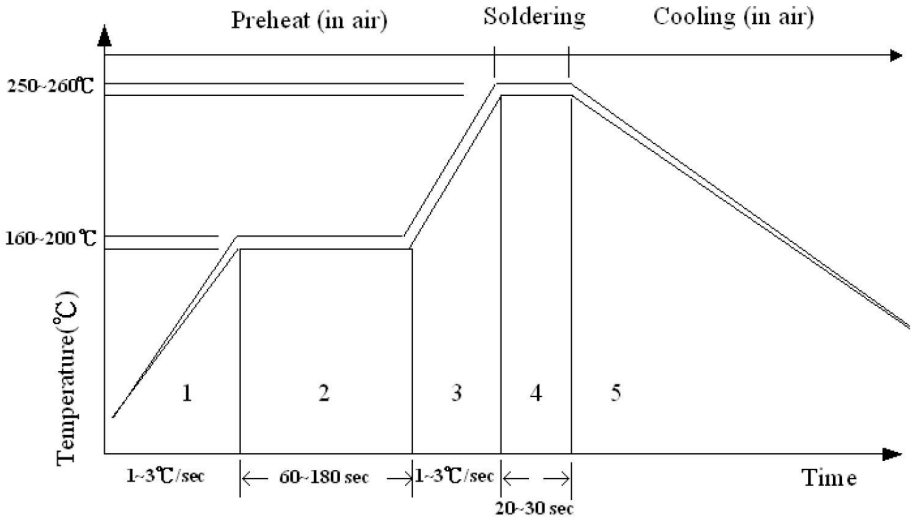

♦ HAND SOLDERING IRON

Item	Condition
Temperature of Soldering Iron-tip	360 ℃ Max.
Diameter of Soldering Iron-tip	ø 3 mm Max.
Soldering Time	3 seconds Max.
Caution: Please do not touch the component surface with soldering iron directly to avoid its damage	

♦ TAPING DIMENSIONS

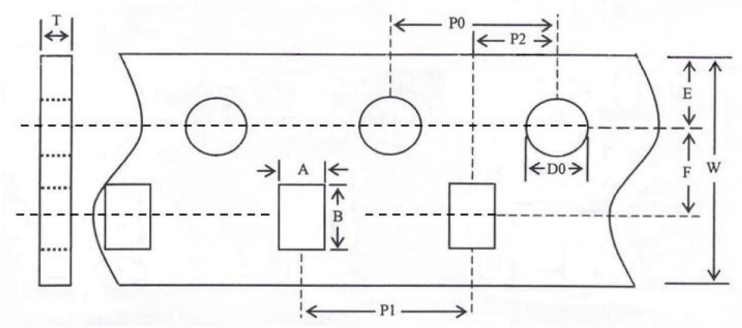

Unit : mm

Dimension	0402	0603	0805	1206
A	0.65 ± 0.10	1.10 ± 0.10	1.50 ± 0.10	2.00 ± 0.10
B	1.15 ± 0.10	1.90 ± 0.10	2.30 ± 0.10	3.57 ± 0.10
W	8.00 ± 0.20	8.00 ± 0.20	8.00 ± 0.20	8.00 ± 0.20
D0	1.50 ± 0.25	1.50 ± 0.25	1.50 ± 0.25	1.55 ± 0.25
E	1.75 ± 0.10	1.75 ± 0.10	1.75 ± 0.10	1.75 ± 0.10
F	3.50 ± 0.05	3.50 ± 0.05	3.50 ± 0.05	3.50 ± 0.05
P0	4.00 ± 0.10	4.00 ± 0.10	4.00 ± 0.10	4.00 ± 0.10
P1	2.00 ± 0.10	4.00 ± 0.10	4.00 ± 0.10	4.00 ± 0.10
P2	2.00 ± 0.10	2.00 ± 0.10	2.00 ± 0.10	2.00 ± 0.10
T	1.10 Max.	1.10 Max.	1.10 Max.	1.10 Max.

♦ REEL DIMENSIONS

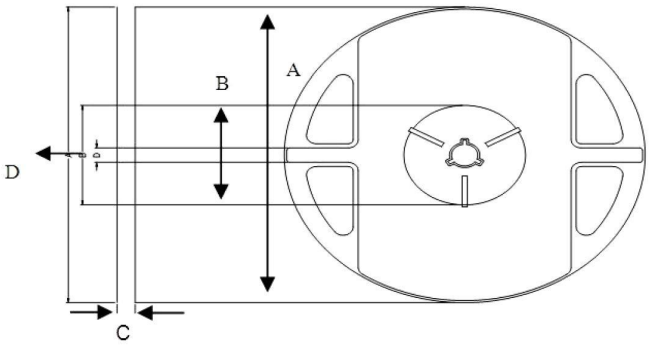

Unit : mm

Item	A	B	C	D
Dimension	178.0 ± 1.0	60.0 ± 1.0	9.0 ± 0.1	13.0 ± 0.1

Item	0402	0603	0805	1206
Qty. / Reel	10000 pcs	4000 pcs	4000 pcs	3000 pcs

♦ STORAGE CONDITIONS

1. Storage Temperature : - 10 ℃ ~ + 40 ℃.
2. Relative humidity : 30 ~ 75 % RH.
3. Thermistor must be kept away from sunshine and stored in a non-corrosive atmosphere.
4. Period of Storage : 1 year.

♦ ORDERING INFORMATION

EWTF	03	-	103	H	3 T	-	N
①	②		③	④	⑤		⑥

1. E WAY SMD Thermistor. (TF - Lead Free ; TH - Lead (Pb))

2. Dimension : 02 (0402) , 03 (0603) , 05 (0805) , 06 (1206).

3. Resistance at 25 ℃ : 103 = 10 x 10^3 = 10,000 (Ω).

4. Tolerance of R : F:±1% ; G:±2% ; H:±3% ; J:±5% ; K:±10%.

5. B value : 3 T = 3970 (3000 + 970)

1: 1000	C: 101~150	I: 401~450	O: 701~750
2: 2000	D: 151~200	J: 451~500	P: 751~800
3: 3000	E: 201~250	K: 501~550	Q: 801~850
4: 4000	F: 251~300	L: 551~600	R: 851~900
A: 0~50	G: 301~350	M: 601~650	S: 901~950
B: 51~100	H: 351~400	N: 651~700	T: 951~999

6. Coating Color : N : New Color (Black).

Resistance-Temperature Characteristics

Part No. : **EWTF03-103H3T-N**

R25 : **10,000** **Ω** **±** **3%**
B25/85 : **3970** **K** **±** **1%**

Temperature (℃)	Resistance (Ω)			Temp. Coef.	Resist. Tol. (%)		Temp. Tol. (℃)	
	MIN.	CENTER	MAX.	(%/℃)	MIN.	MAX.	MIN.	MAX.
-40	314429	335746	358186	-6.65	-6.35	6.68	-1.00	0.95
-39	294449	314203	334980	-6.61	-6.29	6.61	-1.00	0.95
-38	275864	294177	313424	-6.56	-6.23	6.54	-1.00	0.95
-37	258569	275554	293391	-6.52	-6.16	6.47	-0.99	0.95
-36	242467	258227	274763	-6.47	-6.10	6.40	-0.99	0.94
-35	227469	242098	257435	-6.43	-6.04	6.34	-0.99	0.94
-34	213493	227077	241308	-6.38	-5.98	6.27	-0.98	0.94
-33	200462	213082	226292	-6.34	-5.92	6.20	-0.98	0.93
-32	188309	200037	212304	-6.30	-5.86	6.13	-0.97	0.93
-31	176967	187871	199267	-6.25	-5.80	6.07	-0.97	0.93
-30	166379	176521	187112	-6.21	-5.75	6.00	-0.97	0.93
-29	156491	165926	175773	-6.17	-5.69	5.93	-0.96	0.92
-28	147251	156034	165191	-6.13	-5.63	5.87	-0.96	0.92
-27	138614	146792	155312	-6.09	-5.57	5.80	-0.95	0.92
-26	130536	138154	146084	-6.04	-5.51	5.74	-0.95	0.91
-25	122979	130077	137462	-6.00	-5.46	5.68	-0.95	0.91
-24	115906	122523	129401	-5.96	-5.40	5.61	-0.94	0.91
-23	109283	115453	121862	-5.92	-5.34	5.55	-0.94	0.90
-22	103079	108834	114808	-5.88	-5.29	5.49	-0.93	0.90
-21	97265	102636	108205	-5.84	-5.23	5.43	-0.93	0.90
-20	91814	96828	102023	-5.81	-5.18	5.37	-0.92	0.89
-19	86702	91383	96231	-5.77	-5.12	5.30	-0.92	0.89
-18	81906	86278	90803	-5.73	-5.07	5.24	-0.92	0.88
-17	77404	81489	85714	-5.69	-5.01	5.18	-0.91	0.88
-16	73176	76995	80940	-5.65	-4.96	5.12	-0.91	0.88
-15	69205	72776	76462	-5.62	-4.91	5.06	-0.90	0.87
-14	65473	68813	72258	-5.58	-4.85	5.01	-0.90	0.87
-13	61965	65090	68310	-5.54	-4.80	4.95	-0.89	0.87
-12	58666	61590	64602	-5.51	-4.75	4.89	-0.89	0.86
-11	55562	58300	61117	-5.47	-4.70	4.83	-0.88	0.86
-10	52641	55205	57841	-5.44	-4.64	4.77	-0.88	0.85
-9	49891	52292	54759	-5.40	-4.59	4.72	-0.87	0.85
-8	47301	49551	51861	-5.37	-4.54	4.66	-0.87	0.85
-7	44861	46969	49133	-5.33	-4.49	4.61	-0.86	0.84
-6	42561	44538	46564	-5.30	-4.44	4.55	-0.86	0.84
-5	40392	42246	44145	-5.27	-4.39	4.49	-0.85	0.83
-4	38347	40086	41866	-5.23	-4.34	4.44	-0.85	0.83
-3	36417	38049	39718	-5.20	-4.29	4.39	-0.84	0.82
-2	34596	36127	37692	-5.17	-4.24	4.33	-0.84	0.82
-1	32877	34314	35782	-5.13	-4.19	4.28	-0.83	0.82

Resistance-Temperature Characteristics

Part No. : EWTF03-103H3T-N

R25 : 10,000 Ω ± 3%
B25/85 : 3970 K ± 1%

Temperature (℃)	Resistance (Ω)			Temp. Coef.	Resist. Tol. (%)		Temp. Tol. (℃)	
	MIN.	CENTER	MAX.	(%/℃)	MIN.	MAX.	MIN.	MAX.
0	31253	32602	33980	-5.10	-4.14	4.22	-0.83	0.81
1	29718	30986	32278	-5.07	-4.09	4.17	-0.82	0.81
2	28268	29459	30672	-5.04	-4.04	4.12	-0.82	0.80
3	26897	28016	29156	-5.01	-3.99	4.07	-0.81	0.80
4	25601	26653	27723	-4.97	-3.95	4.01	-0.81	0.79
5	24374	25363	26368	-4.94	-3.90	3.96	-0.80	0.79
6	23214	24143	25088	-4.91	-3.85	3.91	-0.80	0.78
7	22115	22989	23877	-4.88	-3.80	3.86	-0.79	0.78
8	21074	21897	22731	-4.85	-3.76	3.81	-0.79	0.77
9	20089	20863	21647	-4.82	-3.71	3.76	-0.78	0.77
10	19155	19884	20621	-4.79	-3.66	3.71	-0.77	0.76
11	18270	18956	19650	-4.76	-3.62	3.66	-0.77	0.76
12	17431	18076	18729	-4.74	-3.57	3.61	-0.76	0.75
13	16635	17243	17857	-4.71	-3.53	3.56	-0.76	0.75
14	15880	16453	17031	-4.68	-3.48	3.51	-0.75	0.74
15	15163	15703	16247	-4.65	-3.44	3.47	-0.75	0.74
16	14483	14992	15504	-4.62	-3.39	3.42	-0.74	0.73
17	13837	14317	14799	-4.59	-3.35	3.37	-0.73	0.73
18	13224	13676	14130	-4.57	-3.30	3.32	-0.73	0.72
19	12641	13067	13495	-4.54	-3.26	3.28	-0.72	0.72
20	12087	12489	12892	-4.51	-3.22	3.23	-0.72	0.71
21	11561	11940	12320	-4.48	-3.17	3.18	-0.71	0.71
22	11060	11418	11776	-4.46	-3.13	3.14	-0.70	0.70
23	10584	10921	11259	-4.43	-3.09	3.09	-0.70	0.70
24	10131	10449	10767	-4.41	-3.04	3.05	-0.69	0.69
25	9700	10000	10300	-4.38	-3.00	3.00	-0.68	0.68
26	9281	9573	9864	-4.35	-3.04	3.04	-0.70	0.70
27	8883	9166	9449	-4.33	-3.08	3.09	-0.71	0.71
28	8504	8779	9054	-4.30	-3.13	3.13	-0.73	0.73
29	8144	8410	8678	-4.28	-3.17	3.18	-0.74	0.74
30	7800	8059	8319	-4.25	-3.21	3.22	-0.76	0.75
31	7473	7724	7977	-4.23	-3.25	3.27	-0.77	0.77
32	7162	7405	7651	-4.20	-3.29	3.31	-0.79	0.78
33	6865	7101	7340	-4.18	-3.33	3.35	-0.80	0.80
34	6582	6812	7043	-4.16	-3.37	3.40	-0.82	0.81
35	6312	6535	6760	-4.13	-3.41	3.44	-0.83	0.83
36	6055	6271	6490	-4.11	-3.45	3.48	-0.85	0.84
37	5809	6020	6232	-4.08	-3.49	3.52	-0.86	0.85
38	5575	5779	5985	-4.06	-3.53	3.57	-0.88	0.87
39	5352	5550	5750	-4.04	-3.57	3.61	-0.89	0.88

Resistance-Temperature Characteristics

Part No. : EWTF03-103H3T-N

R25 : 10,000 Ω ± 3%
B25/85 : 3970 K ± 1%

Temperature (℃)	Resistance (Ω)			Temp. Coef.	Resist. Tol. (%)		Temp. Tol. (℃)	
	MIN.	CENTER	MAX.	(%/℃)	MIN.	MAX.	MIN.	MAX.
40	5139	5331	5525	-4.02	-3.61	3.65	-0.91	0.90
41	4935	5122	5311	-3.99	-3.65	3.69	-0.92	0.91
42	4740	4922	5105	-3.97	-3.69	3.73	-0.94	0.93
43	4555	4731	4909	-3.95	-3.72	3.77	-0.96	0.94
44	4377	4548	4722	-3.93	-3.76	3.81	-0.97	0.96
45	4207	4373	4542	-3.90	-3.80	3.86	-0.99	0.97
46	4045	4206	4370	-3.88	-3.84	3.90	-1.00	0.99
47	3890	4047	4206	-3.86	-3.87	3.94	-1.02	1.00
48	3742	3894	4049	-3.84	-3.91	3.98	-1.04	1.02
49	3600	3748	3898	-3.82	-3.95	4.02	-1.05	1.03
50	3464	3608	3754	-3.80	-3.98	4.06	-1.07	1.05
51	3334	3474	3616	-3.78	-4.02	4.09	-1.08	1.06
52	3210	3345	3484	-3.75	-4.06	4.13	-1.10	1.08
53	3090	3222	3357	-3.73	-4.09	4.17	-1.12	1.10
54	2976	3105	3235	-3.71	-4.13	4.21	-1.13	1.11
55	2867	2992	3119	-3.69	-4.16	4.25	-1.15	1.13
56	2762	2883	3007	-3.67	-4.20	4.29	-1.17	1.14
57	2662	2780	2900	-3.65	-4.23	4.33	-1.18	1.16
58	2566	2680	2797	-3.63	-4.27	4.37	-1.20	1.17
59	2474	2585	2699	-3.61	-4.30	4.40	-1.22	1.19
60	2385	2493	2604	-3.59	-4.34	4.44	-1.24	1.21
61	2300	2406	2513	-3.58	-4.37	4.48	-1.25	1.22
62	2219	2321	2426	-3.56	-4.41	4.52	-1.27	1.24
63	2141	2240	2342	-3.54	-4.44	4.55	-1.29	1.26
64	2066	2163	2262	-3.52	-4.47	4.59	-1.30	1.27
65	1994	2088	2185	-3.50	-4.51	4.63	-1.32	1.29
66	1925	2017	2111	-3.48	-4.54	4.66	-1.34	1.30
67	1859	1948	2039	-3.46	-4.57	4.70	-1.36	1.32
68	1795	1882	1971	-3.44	-4.61	4.73	-1.37	1.34
69	1734	1818	1905	-3.43	-4.64	4.77	-1.39	1.35
70	1675	1757	1841	-3.41	-4.67	4.81	-1.41	1.37
71	1618	1698	1781	-3.39	-4.70	4.84	-1.43	1.39
72	1564	1642	1722	-3.37	-4.74	4.88	-1.45	1.40
73	1512	1588	1666	-3.35	-4.77	4.91	-1.46	1.42
74	1462	1535	1611	-3.34	-4.80	4.95	-1.48	1.44
75	1413	1485	1559	-3.32	-4.83	4.98	-1.50	1.46
76	1367	1437	1509	-3.30	-4.86	5.02	-1.52	1.47
77	1322	1390	1460	-3.29	-4.90	5.05	-1.54	1.49
78	1279	1345	1414	-3.27	-4.93	5.09	-1.56	1.51
79	1238	1302	1369	-3.25	-4.96	5.12	-1.57	1.52

Resistance-Temperature Characteristics

Part No. : EWTF03-103H3T-N

R25 : 10,000 Ω ± 3%
B25/85 : 3970 K ± 1%

Temperature (℃)	Resistance (Ω)			Temp. Coef.	Resist. Tol. (%)		Temp. Tol. (℃)	
	MIN.	CENTER	MAX.	(%/℃)	MIN.	MAX.	MIN.	MAX.
80	1198	1261	1326	-3.24	-4.99	5.16	-1.59	1.54
81	1159	1221	1284	-3.22	-5.02	5.19	-1.61	1.56
82	1122	1182	1244	-3.20	-5.05	5.22	-1.63	1.58
83	1087	1145	1205	-3.19	-5.08	5.26	-1.65	1.59
84	1052	1109	1168	-3.17	-5.11	5.29	-1.67	1.61
85	1019	1075	1132	-3.15	-5.14	5.32	-1.69	1.63
86	987	1041	1097	-3.14	-5.17	5.36	-1.71	1.65
87	957	1009	1064	-3.12	-5.20	5.39	-1.73	1.67
88	927	978	1031	-3.11	-5.23	5.42	-1.75	1.68
89	899	948	1000	-3.09	-5.26	5.46	-1.77	1.70
90	871	920	970	-3.07	-5.29	5.49	-1.78	1.72
91	844	892	941	-3.06	-5.32	5.52	-1.80	1.74
92	819	865	913	-3.04	-5.35	5.55	-1.82	1.76
93	794	839	886	-3.03	-5.37	5.58	-1.84	1.77
94	770	814	860	-3.01	-5.40	5.62	-1.86	1.79
95	747	790	835	-3.00	-5.43	5.65	-1.88	1.81
96	725	767	810	-2.98	-5.46	5.68	-1.90	1.83
97	703	744	787	-2.97	-5.49	5.71	-1.92	1.85
98	683	723	764	-2.95	-5.52	5.74	-1.94	1.87
99	663	702	742	-2.94	-5.54	5.77	-1.96	1.89
100	643	681	721	-2.93	-5.57	5.80	-1.98	1.90
101	625	662	700	-2.91	-5.60	5.84	-2.00	1.92
102	607	643	680	-2.90	-5.63	5.87	-2.02	1.94
103	589	624	661	-2.88	-5.65	5.90	-2.05	1.96
104	572	607	643	-2.87	-5.68	5.93	-2.07	1.98
105	556	590	625	-2.86	-5.71	5.96	-2.09	2.00
106	540	573	607	-2.84	-5.73	5.99	-2.11	2.02
107	525	557	591	-2.83	-5.76	6.02	-2.13	2.04
108	510	542	574	-2.81	-5.79	6.05	-2.15	2.06
109	496	527	559	-2.80	-5.81	6.08	-2.17	2.08
110	482	512	543	-2.79	-5.84	6.11	-2.19	2.10
111	469	498	529	-2.77	-5.87	6.14	-2.21	2.11
112	456	484	514	-2.76	-5.89	6.17	-2.23	2.13
113	443	471	500	-2.75	-5.92	6.20	-2.25	2.15
114	431	459	487	-2.73	-5.94	6.22	-2.28	2.17
115	420	446	474	-2.72	-5.97	6.25	-2.30	2.19
116	408	434	461	-2.71	-6.00	6.28	-2.32	2.21
117	397	423	449	-2.70	-6.02	6.31	-2.34	2.23
118	387	411	437	-2.68	-6.05	6.34	-2.36	2.25
119	376	401	426	-2.67	-6.07	6.37	-2.38	2.27

Resistance-Temperature Characteristics

Part No. : **EWTF03-103H3T-N**

R_{25} : **10,000** **Ω** **±** **3%**
$B_{25/85}$: **3970** **K** **±** **1%**

Temperature (℃)	Resistance (Ω)			Temp. Coef.	Resist. Tol. (%)		Temp. Tol. (℃)	
	MIN.	CENTER	MAX.	(%/℃)	MIN.	MAX.	MIN.	MAX.
120	366	390	415	-2.66	-6.10	6.40	-2.41	2.29
121	357	380	404	-2.65	-6.12	6.42	-2.43	2.31
122	347	370	394	-2.63	-6.15	6.45	-2.45	2.33
123	338	360	384	-2.62	-6.17	6.48	-2.47	2.35
124	329	351	374	-2.61	-6.20	6.51	-2.49	2.37
125	321	342	364	-2.60	-6.22	6.54	-2.52	2.39